10 September 1980

MILITARY STANDARD

TEST METHODS FOR ELECTRICAL CONNECTORS

TO ALL HOLDERS OF MIL-STD-1344A:

1. THE FOLLOWING METHOD IS TO BE ADDED:

NEW METHOD	DATE
3008 - SHIELDING EFFECTIVENESS OF MULTICONTACT CONNECTORS	10 September 1980

2. THE FOLLOWING PAGES OF MIL-STD-1344A HAVE BEEN REVISED AND SUPERSEDE THE PAGES LISTED:

NEW PAGE	DATE	SUPERSEDED PAGE	DATE
5	10 September 1980	5	1 September 1977
6	10 September 1980	6	1 September 1977

RETAIN THIS NOTICE PAGE AND INSERT BEFORE THE TABLE OF CONTENTS.

Holders of MIL-STD-1344A will verify that page changes and additions indicated above have been entered. This notice page will be retained as a check sheet. This issuance, together with appended pages, is a separate publication. Each notice is to be retained by stocking points until the Military Standard is completely revised or canceled.

Custodians:
Army - CR
Navy - AS
Air Force - 11

Review activities:
Army - MI, AR
Navy - EC
Air Force - 17, 85, 99
DLA - ES

User activities:
Army - AT, SL, WC
Navy - MC, OS, SH

Preparing activity:
Navy - AS

Agent:
DLA - ES

(Project 5935-3180)

TABLE I. Cross reference equivalent test methods.

MIL-STD-1344 Method	MIL-STD-202 Method	MIL-STD-810 Method
1001	101	
1002, type II	103 (type I) 106 (type II)	507 (1)
1003	107	
1004		
1005		
1006		
1007		
1008		
1009		
1010	102 and 107	
1011	301	
1012		
1013		
1015		
1016		
2001		
2002		
2003		
2004	213	
2005	(I, II, III, IV) (V and VI) 201, 204 214	
2006		
2007		
2008		
2009		
2010		
2011	212	
2012		
2013		
2014		
2015		
2016		
2017		
2018		
3001	105 and 301	
3002		
3003		
3004		
3005		
3006		
3007		
3008		

5. NUMERICAL INDEX OF TEST METHODS

METHOD NUMBER	TITLE
	Environmental tests (1000 class)
1001.1	Salt spray (corrosion)
1002.2	Humidity
1003.1	Temperature cycling
1004.1	Altitude immersion
1005.1	Temperature life
1006.1	Hydrostatic pressure
1007.1	Ozone exposure
1008	Air leakage
1009	Firewall
1010	
1011	Altitude-low temperature
1012	Flammability
1013	
1014	
1015	Simulated life
1016	Fluid immersion
	Mechanical tests (2000 class)
2001.1	Contact axial concentricity
2002.1	Maintenance aging
2003.1	Crimp tensile strength
2004.1	Shock (specified pulse)
2005.1	Vibration
2006.1	Probe damage (contacts)
2007.1	Contact retention
2008.1	Crush
2009.1	Cable pull-out
2010.1	Insert retention
2011.1	Acceleration
2012.1	Contact insertion and removal force
2013.1	Mating and unmating forces
2014	Contact engagement and separation force
2015	Impact
2016	Durability
2017	Cable seal flexing
2018	Gage location and retention
	Electrical tests (3000 class)
3001.1	Dielectric withstanding voltage
3002.1	Low signal level contact resistance
3003.1	Insulation resistance
3004.1	Contact resistance
3005	Standing Wave Ratio (SWR)
3006	Magnetic permeability
3007	Shell to shell conductivity
3008	Shielding effectiveness for multicontact connectors

Supersedes page 5 of 1 September 1977.

10 September 1980

METHOD 3008

SHIELDING EFFECTIVENESS OF MULTICONTACT CONNECTORS

1. PURPOSE.

1.1 Purpose. This method measures the shielding effectiveness of multicontact connectors in the 1-10 GHz frequency range utilizing mode-stirred techniques.

1.2 Application. This method involves measuring the leakage at the connector pair interface of a multicontact connector placed in a shielded enclosure, as shown on figure A1. The connector under test is exposed to electromagnetic fields which are made statistically random by a rotating reflective surface (mode-stirrer). The leakage of the connector is expressed as shielding effectiveness measured in decibels (dB). The shielding effectiveness of the connector in decibels is defined as:

$$S.E. = 10 \log \left(\frac{\overline{P}_{REF}}{\overline{P}_{CUT}} \right)$$

Two sets of measurements are required: (1) a reference measurement and (2) a shield measurement. Both measurements shall be performed with the test item in the chamber and at the same frequency within 100 kHz. The reference measurement can be performed once at each frequency and can be utilized for subsequent connector tests provided the measurement system is linear.

2. DEFINITIONS.

2.1 Units. The International System of Units, as adopted by the United States Bureau of Standards is used. This system of units (designated "SI" for System Internationale d'Unites) was defined and given official status at the 11th General Conference on Weights and Measures in Paris at a 1960 meeting. MIL-STD-463 gives a description of the system of units used in this standard.

2.2 Terms. The meaning of terms contained in this test are in accordance with MIL-STD-463. In addition to those terms, the following terms are also defined:

2.2.1 Shielded conduit. Any conductor or conductors enclosed by a solid conducting sheath. The conductor or conductors may themselves serve as a sheath for other conductors.

2.2.2 Shielded enclosure. A housing, screen, or other object that is intended to substantially reduce the effect of electric or magnetic-fields upon devices or circuits on one side of the shield. Examples include cases, cabinets, airframes, etc.

2.2.3 Shielding effectiveness. For a given incident field, the ratio (usually expressed in decibels) of the power received by a load protected by an electromagnetic shield to that power which would be received by the load in the absence of the shield.

2.2.4 Test item. A general term used to refer either a shielded cable and/or connector.

2.3 Abbreviations and symbols.

AWG	American Wire Gauge
CUT	Connector under test
cm	Centimeters
d	Generalized dimension, in meters, for design of mode-stirrer
D	Distance of connector from chamber wall equal to one wavelength at the lowest test frequency
dB	Decibels
dBm	Power measured in dB referenced to one milliwatt
EM	Electromagnetic
f_{GHz}	Frequency in gigahertz
f_{opGHz}	Freqency in gigahertz of lowest operating frequency for which mode-stirred chamber is designed
FM	Frequency modulation
GHz	Gigahertz

$h(x)$	Height of the nearest edge of the connector forming the transmission line taper above test chamber wall at a distance "x" from the connector end of the taper (see figure 8-2)
H	Height of the center of the long wire antenna above test chamber wall
kHz	Kilohertz
ℓ_T	The length in centimeters measured along the conducting wire from which the transmission line taper is constructed (see figure 8-2)
L	Length of extreme dimension associated with a test item
L/λ	Electrical length of test item
L_a	Total length of long wire antenna including the transmission line tapers attached to both ends
L_T	Length of one transmission line taper
λ	Wavelength associated with a given test frequency radiating in free space
m	Meters
MHz	Megahertz
MS	Mode-stirred ohms
$P_{in\ CUT}$	Input power to the mode-stirred chamber when P_{CUT} is being measured
$P_{in\ REF}$	Input power to the mode-stirred chamber when P_{REF} is being measured
$\overline{P}_{CUT}$	Average power over one mode-stirrer rotation received by the connector under test
$\overline{P}_{REF}$	Average power over one mode-stirrer rotation received by the reference antenna
R	Inside radius of type-N connector
RF	Radiofrequency
SE	Shielding effectiveness
VSWR	Voltage standing wave ratio
x	Distance, in centimeters, along transmission line taper as measured from the connector end of the taper (see figure 8-2)

3. TEST EQUIPMENT.

3.1 General test equipment. The following equipment shall be used for these measurements. Characteristics are described in 3.1.1 through 3.1.5 for the items that have particular requirements.

a. Signal source
b. Circulator
c. Frequency counter
d. Shielded cable
e. Directional couplers
f. Power meters
g. 50-ohm loads
h. Attenuators

3.1.1 Signal source. The signal source(s) shall be RF signal generator-power amplifier combination(s) or power oscillator(s) with a power output capability of one watt minimum. To assure measurement repeatability, the signal source shall have a residual FM stability of better than 100 kHz at any test frequency and the frequency shall be resetable within this tolerance when using a frequency counter.

3.1.2 Shielded conduit. A low-loss semirigid coaxial cable shall be utilized. This conduit, associated adaptors, and resulting joints shall have a shielding effectiveness at least 10 dB greater than that required of the connector under test to ensure that the leakage measured in paragraph 4 is due to the connector under test only.

3.1.3 Directional couplers. These shall be any devices capable of providing a signal proportional to the forward power from the signal source. They shall have a coupling of greater than 15 dB (i.e., the signal provided by the directional couplers shall be more than 15 dB below the forward power to be monitored) and directivity on the order of 20 dB or greater.

3.1.4 Power meters. These shall be devices that have input impedance of 50 ohms and that are capable of measuring conducted power from 1 to 10 GHz.

3.1.5 Receiver. This equipment must have the sensitivity to measure the small signals from the connector/conduit assembly. For a mode-stirred chamber with a lower usable frequency of 1 GHz, the receiver must have a sensitivity of -90 dBm to measure shielding effectiveness values of 90 dB from 1-10 GHz. For use of the "Continuous Sample Averaging" technique, described in paragraph 3.2.2.2, it is desirable that the receiver have a variable output time constant capability for signal averaging. A lock-in analyzer, or equivalent, has the specified sensitivity and the variable output time and constant capability.

3.2 Special test equipment.

3.2.1 Mode-stirred chamber. This shall be a shielded metal enclosure that has a minimum shielding effectiveness above 1 GHz of 60 dB as measured by MIL-STD-285. Modifications to the chamber include installation of an input antenna, reference antenna, and mode-stirrer. Requirements for the shielded enclosure are contained in Appendix A, along with a description of the required modifications for converting it to a mode-stirred chamber.

3.2.1.1 Input antenna. An input antenna shall be provided by a long wire (>5λ at the lowest test frequency) installed along the sides of the mode-stirred chamber. An impedance matching taper can be utilized at both ends of this long wire antenna to effectively increase the dynamic range of the measurement system. These tapers are not necessary however, for proper mode-stirred chamber operation. Construction of the antenna along with its associated tapers is described in Appendix B. This installation of the antenna in the mode-stirred chamber shall be as described in Appendix A.

3.2.1.2 Reference antenna. A reference antenna, identical to the input antenna, shall be installed in the mode-stirred chamber. Installation and construction of the antenna is described in Appendices A and B.

3.2.1.3 Mode-stirrer. A mode-stirrer shall be installed in the mode-stirred chamber. This device may be constructed from sheet aluminum by using simple hand tools as described in Appendix C, with installation of the mode-stirrer described in Appendix A.

3.2.2 Data collection system. This system, which includes the receiver, must be capable of obtaining an average of the signals from the reference antenna and the connector/conduit assembly for one rotation of the mode-stirrer. A two-channel system will allow both measurements to be taken simultaneously. Measurements in the mode-stirred chamber are made by sampling the signals from the reference antenna and connector/conduit assembly as the mode-stirrer is moved through 360° in rotation. The signal averaging can be accomplished with the use of one of the following data collection systems: (1) Discrete Sample Averaging System, and (2) Continuous Sample Averaging System.

3.2.2.1 Discrete sample averaging system. This system, shown on figure 1, samples the signals at a discrete number (e.g., 200) of mode-stirrer positions. Each data value is then stored in a memory device and an average calculated after the measurement has been completed. This system must also control the stepper motor used for rotation of the mode-stirrer.

3.2.2.2 Continuous sample averaging system. This system, shown on figure 2, continuously rotates the mode-stirrer at a moderate speed with the signal averaged in real time by a device that has a time constant which is at least three (3) times longer than the time for one mode-stirrer rotation. The receiver and averaging device may be the same equipment or separate. This averaging system offers the advantage of reduced test time and a simpler data collection system.

3.2.3 Mode-stirrer motor. For the "Discrete Sample Averaging" system, a stepper motor with sufficient torque shall be used for rotation of the mode-stirrer. A variable speed, continuously rotating motor shall be used for the "Continuous Sample Averaging" system.

3.3 Measurement frequencies. Measurements shall be taken at ten (10) frequencies in the range from 1-10 GHz. The frequency intervals shall be such that no measurement frequency may lie within 80 percent of the next highest or 125 percent of the next lowest measurement frequency.

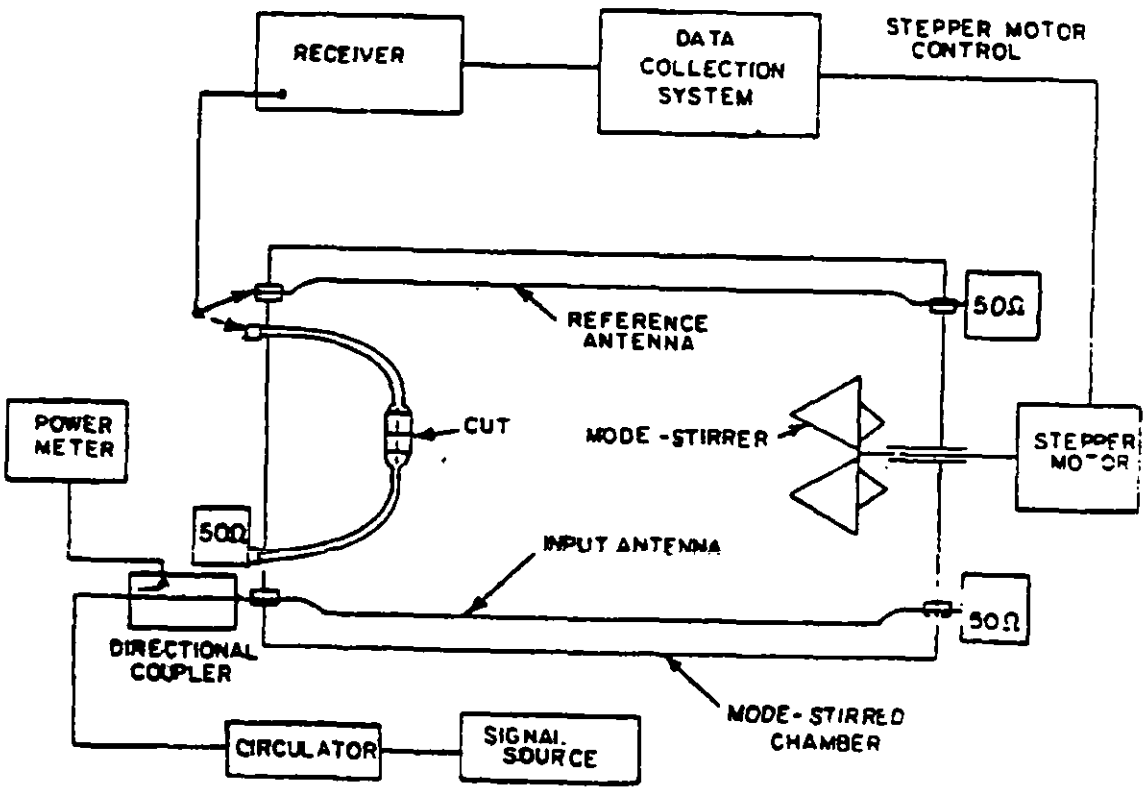

FIGURE 1. Discrete sample averaging system.

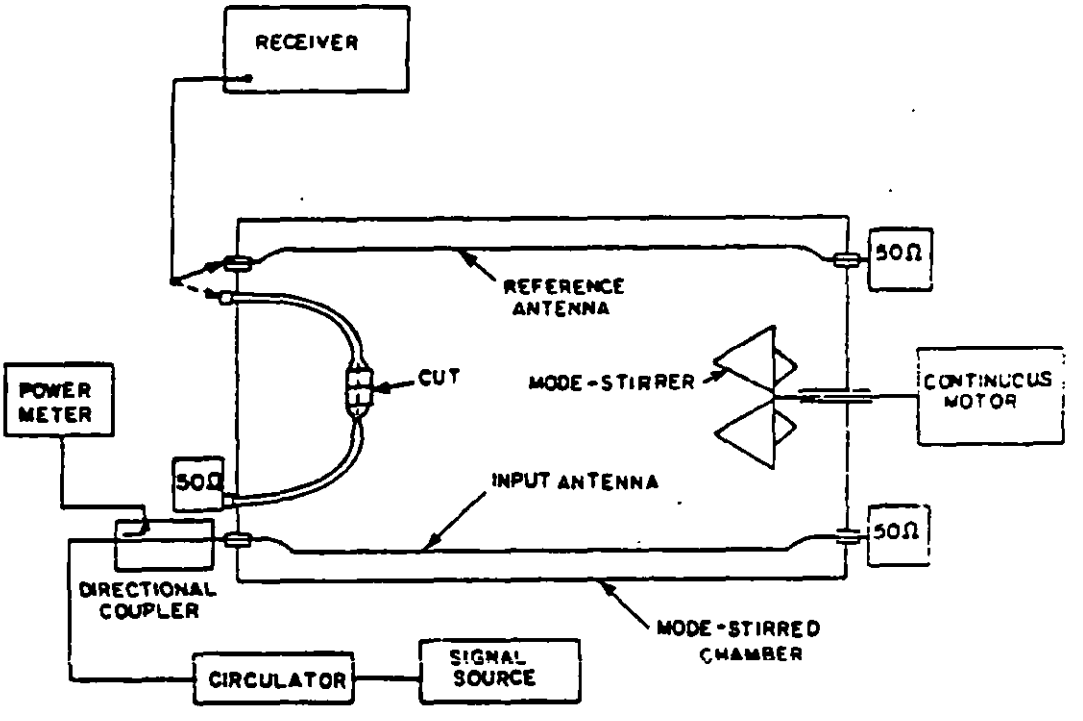

FIGURE 2. Continuous sample averaging system.

3.4 Preparation and installation of connector/shielded conduit assembly.

3.4.1 Preparation. The connector under test shall be connected to the shielded conduit and mounted on a chamber wall as shown on figure 3. The connector shall be located a distance, D, of one wavelength off the wall at the lowest test frequency. The length of the connector/conduit assembly shall be 4.0 ±0.1 wavelengths at the lowest test frequency. Adaptors may be used to fit the conduit to the connector under test. All resulting joints shall be peripherally sealed to obtain maximum shielding. The pickup wire inside the connector shall be a 5.0 ±0.5 centimeter length of the center conductor of the conduit obtained by removing the outer shield. The pickup wire shall be positioned in the center of the connector and held in place by dielectric retainers or the dielectric insert of the connector.

3.4.2 Installation. The connector/conduit assembly shall be securely fastened to the chamber wall with the conduit passing through the wall and terminated in type-N connectors as shown on figure 3. Care should be taken to ensure that the shielding integrity of the chamber is maintained at the points of attachment of the conduit to the chamber wall.

3.5 Swept frequency VSWR measurement on connector/conduit assembly. A swept frequency VSWR measurement shall be performed on the complete connector/conduit assembly shown on figure 3. The frequency range of the measurement shall be 1-10 GHz and a plot of the VSWR versus frequency shall be made on an X-Y recorder for every connector tested. This VSWR plot shall be included with the shielding effectiveness data obtained from the measurement described in paragraph 4.

4. TEST PROCEDURE.

4.1 Test procedure. With the connector and conduit assembly prepared as described in paragraph 3.4 and the mode-stirred chamber configured as described in paragraph 3.2, the following procedures shall be performed at each frequency. These procedures utilize the test configurations shown on figures 1 and 2.

4.2 Reference measurements. Perform the following reference measurement:

a. Connect the equipment for measuring the average signal to the reference antenna.
b. Terminate both ends of the connector/cable assembly in 50-ohm loads.
c. Apply sufficient input power to the chamber to observe the signal on the reference antenna.
d. Obtain the average signal ($\overline{P}_{REF}$) on the reference antenna for mode-stirrer rotation.
e. Record this average value as well as the chamber input power ($P_{in\ REF}$).
f. Repeat at each frequency.

4.3 Shield measurements. At the same frequency (within 100 kHz) at which the reference measurement was performed, perform the following shield measurement:

a. Disconnect a 50-ohm load from one end of the connector/conduit assembly and connect the equipment for measuring the average signal.
b. Connect a 50-ohm load to the reference antenna input.
c. Apply sufficient input power to the chamber to observe the signal on the connector/conduit assembly.
d. Obtain the average signal ($\overline{P}_{CUT}$) on the connector/conduit assembly with the mode-stirrer rotation.
e. Record this average value as well as the chamber input power ($P_{in\ CUT}$).
f. Repeat at each frequency.

4.4 Calculated shielding effectiveness. For each test frequency, calculate the shielding effectiveness (S.E.) of the connector from the above data and the following formula:

$$S.E. = 10 \log_{10} \left[\left(\frac{\overline{P}_{REF}}{P_{in\ REF}} \right) \Big/ \left(\frac{\overline{P}_{CUT}}{P_{in\ CUT}} \right) \right]$$

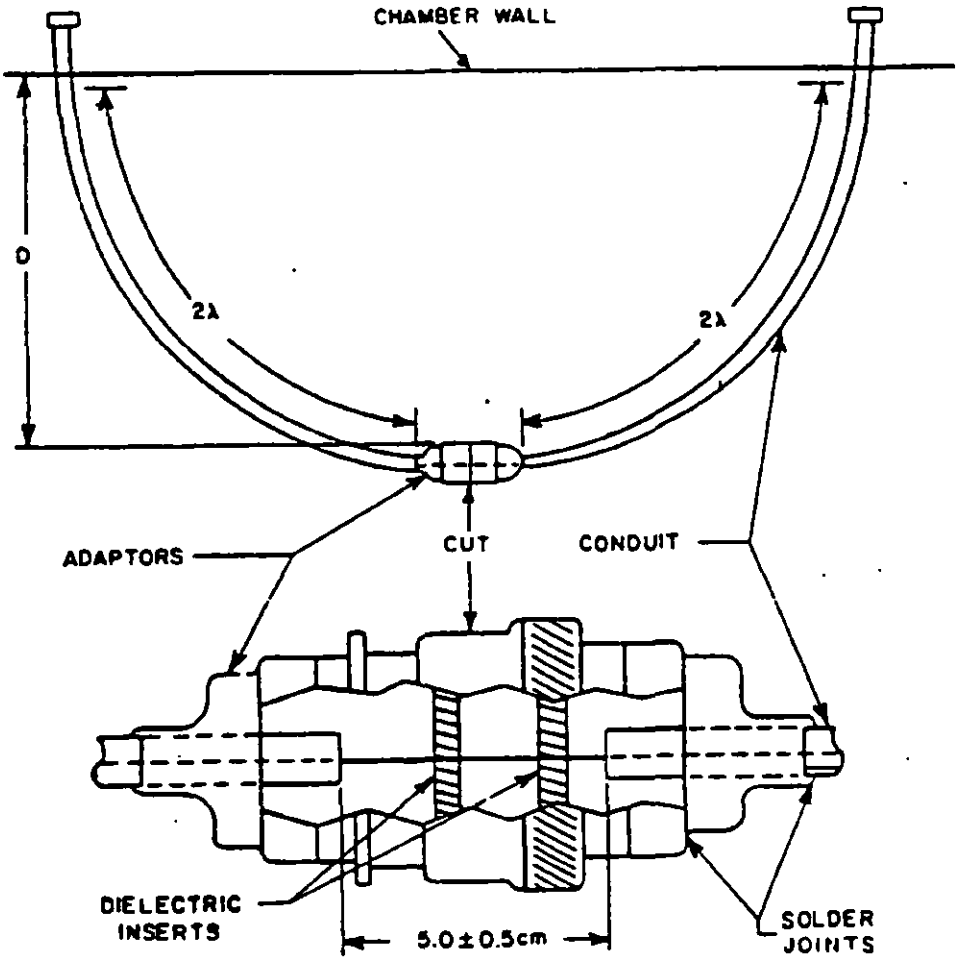

FIGURE 3. Preparation and installation of connector/conduit assembly.

5. DOCUMENTATION. Data sheets shall contain:

a. Title of test, date and name of operator.
b. Sample description - Include fixture, if applicable.
c. Test equipment used and date of latest calibration.
d. Values and observations.

6. SUMMARY. The following details shall be specified in the individual specification:

a. Frequencies to be tested if other than those listed in 1.1
b. Shielding effectiveness of the connector pair.

APPENDIX A

DESIGN OF MODE-STIRRED TEST CHAMBER

10. General.

10.1 The mode-stirred technique utilizes a test chamber which exposes a test item to statistically random incident fields. Basically, this test method employs a shielded test chamber configured to assure the excitation of statistically random fields. The test chamber is essentially a low loss, shielded enclosure which has been modified by the installation of an input antenna, reference antenna, and a mode-stirrer. Designs for these items are provided in Appendices B and C, respectively. Guidelines for integrating these items into the chamber are provided in this appendix.

20. Design requirements.

20.1 The minimum chamber dimension shall be at least three free space wavelengths at the lowest frequency at which tests are to be performed. In addition, the minimum distance between the test item and the chamber walls shall be at least one wavelength at the lowest frequency at which tests are to be performed.

30. Detailed procedures.

30.1 Chamber enclosure. This shall be a shielded metal enclosure whose minimum shielding effectiveness above 1 GHz is 60 dB as measured by MIL-STD-285. The chamber shall be constructed of low-loss materials. Lossy materials such as floor coverings, tables, light wiring, etc., should be eliminated or minimized to the maximum extent possible.

30.2 Access door. An access door or panel shall be placed in one wall of the chamber. This door shall be large enough to allow entry of the test item and shall provide sufficient access for working with the test item. The 60 dB shielding integrity of the chamber shall be maintained. If additional doors are required, they shall meet these same requirements.

30.3 Input antenna. An input antenna shall be provided by a long wire (> 5λ at the lowest test frequency) installed along the sides of the chamber. Impedance matching tapers may be utilized at both ends. Layout of the input antenna shall be as shown on figure A-1. In this figure, the input is provided via a type-N bulkhead connector (RF power input) located approximately at the center of one end of the chamber. Inside the chamber, the center conductor is connected to a taper which extends diagonally toward the upper right corner of this same wall of the chamber. At this point, the taper is connected to a long wire then gently bends around the corner and geometrically oscillates in a plane parallel to the side wall of the chamber. At the far end, the long wire gently bends around the corner and is connected to a second taper terminated in a 50-ohm load. Standoff insulators of very low loss, such as styrofoam, shall be used to support the long wire and tapers. The distance of the long wire from the chamber wall shall be as determined in Appendix B. The distance shall be maintained within a 10 percent tolerance at all locations except where the transmission line bends around a corner. At corners, the line shall be bent to provide a smooth curve around the corner as shown on figure A-2 so as to achieve a radius of curvature, R, equal to the typical distance between the long wire antenna and the chamber wall.

30.4 Reference antenna. A reference antenna of the same length as the input antenna shall be installed inside the chamber. The distance of this antenna from the chamber walls is the same as for te input antenna. A suggested layout is illustrated on figure A-1. The design and fabrication of this antenna, along with its associated impedance matching tapers shall be identical to the input antenna.

30.5 Mode-stirrer. A mode-stirrer, as indicated on figure A-1, shall be installed inside the chamber. The mode-stirrer may be constructed with simple hand tools as described in Appendix C. To provide rotation, the center of the mode-stirrer is connected to the center of a nonconducting rod whose diameter is less than 1 centimeter. A metal tube shall be placed in the chamber wall for the rod to exit

the chamber. The tube shall have a maximum inside diameter of 1.0 centimeter and a length greater than 8 centimeters. The metal tube shall be electrically bonded (soldered or welded) around its entire periphery to the chamber wall at the exit point. This bond shall preserve the 60 dB shielded integrity of the chamber. The mode-stirrer may be placed at any convenient location within the test chamber to optimize available space for testing large test items. The distances of the mode-stirrer to the test item or the walls of the MS chamber are not critical as long as there is no interference with rotation of the mode-stirrer.

30.6 Installation of test item. The test item shall be placed in the chamber so that the shortest distance between any point on the test item and any MS chamber wall is at least 1λ for the lowest test frequency. Styrofoam shall be used to support the weight of the test item.

30.7 Relationships between dimensions. Once either the chamber size or lowest operating frequency has been chosen, the dimensions of several related items becomes fixed. For example, figure A-3 illustrates the inherent relationships between chamber size, lowest operating frequency, mode-stirrer size, length of long wire antennas, standoff height of long wire antennas above chamber walls and the length of any one of the impedance matching tapers. For example, a chamber designed to operate at a minimum frequency of 1 GHz would require the set of corresponding dimensions provided in table A-1.

TABLE A-1
Sample dimensions for mode-stirred chamber

Smallest test chamber dimension = 3λ = 90 centimeters = 0.9 meters

Minimum operating frequency = 1000 MHz

Recommended minimum mode-stirrer size = 1λ = 0.3 meters

Length of a single impedance matching taper = 1λ = 30 centimeters

Standoff height of long wire antenna above chamber walls = $\lambda/4$ = 7.5 centimeters = 0.075 meters

Minimum length of long wire antenna = 5λ = 150 centimeters

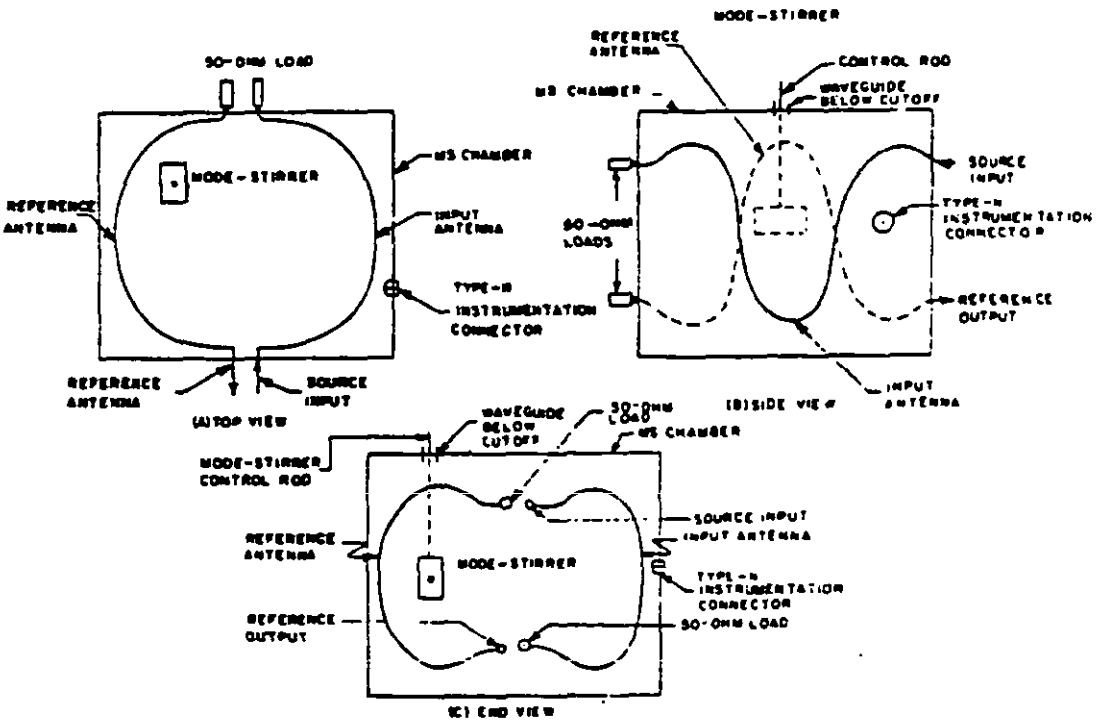

FIGURE A-1. Mode stirred test chamber.

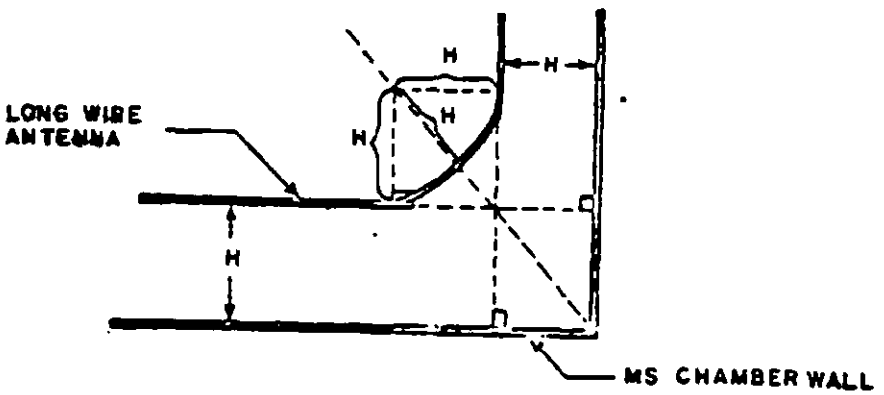

FIGURE A-2. Transmission line bend around corner.

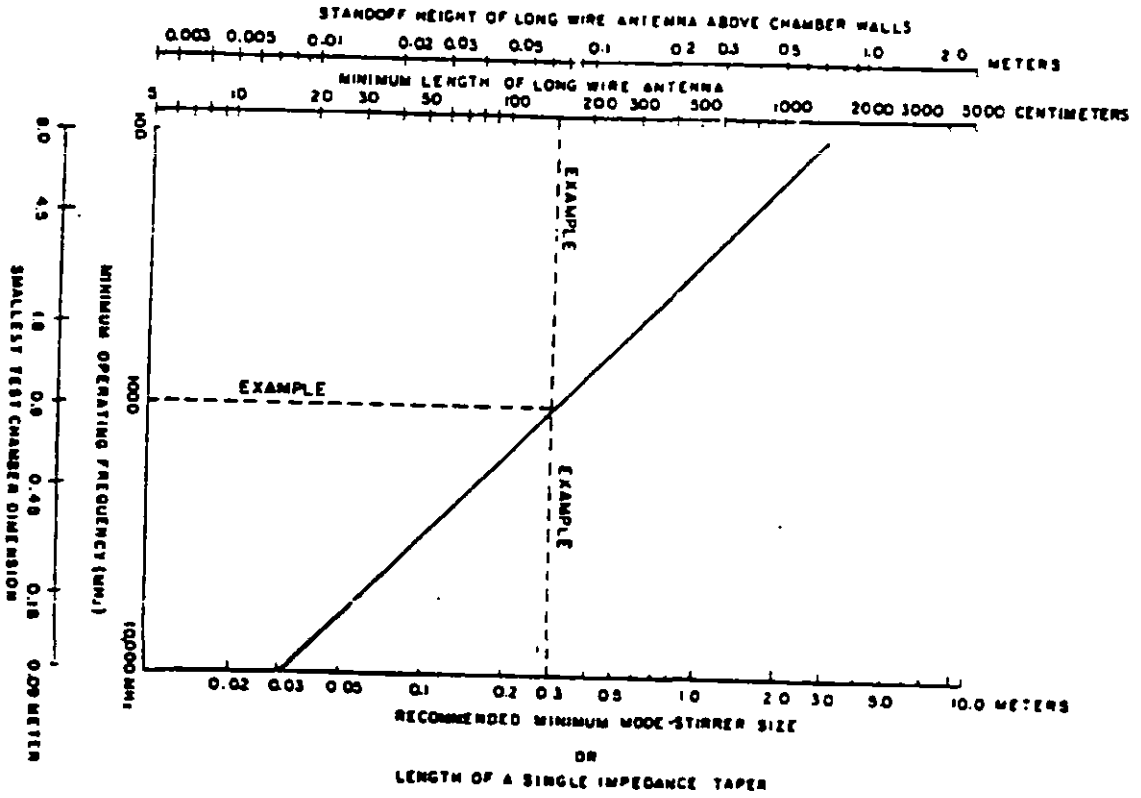

FIGURE A-3. Relationships between mode stirred test chamber dimensions.

10 September 1980

APPENDIX B

METHOD 3008

APPENDIX B

DESIGN PROCEDURES FOR LONG WIRE ANTENNAS
AND IMPEDANCE MATCHING TAPERS

10. General

10.1 To minimize input power requirements and maximize test sensitivity, impedance matching tapers comprised of a section of tapered transmission may be utilized at both ends of the input and reference antenna as indicated on figure B-1. For this application, tapering is accomplished by varying the spacing between the #10 AWG construction wire and the wall of the mode-stirred chamber. The purpose of the tapers is to enable the user to make more efficient use of the power available from the source. The procedures contained in this section are for long wire antennas and tapers designed for installation in chambers whose lowest operating frequencies are 1000 MHz, 500 MHz, and 200 MHz. If a chamber is designed for some higher frequency, the design procedures for the next lowest frequency shall be utilized: i.e., and 800 MHz chamber should use the antenna and taper designs provided for 500 MHz.

20. Design requirements.

20.1 Design requirements for the separation distance between the long wire and the wall as well as the requirements for design of the tapered sections are based upon the wavelength at the lowest frequency for which the chamber is designed. Construction tolerances in the order of 10 percent are adequate. Consequently, the majority of the construction may be performed by carefully bending the wire by hand into the shapes required to form the long wire transmission line and the impedance matching tapers at each end. A wire size of #10 AWG shall be utilized for all construction describes in this appendix.

30. Detailed procedures.

30.1 Chamber designed for 1 GHz. As shown on figure B-1, the total length, L_a, of the long wire antenna with tapers attached to both ends shall be at least 150 centimeters according to table B-1.

30.1.1 Long wire transmission line. the length, L_a-2L_T, of the long wire transmission line shall be longer, if necessary, to satisfy the minimum overall length requirement as well as to permit ease of installation in test chamber as described in Appendix A. As shown on figure B-2, the distance, H, of the center of the long wire from the chamber walls shall be 7.5 centimeters. At a corner, the wire shall be bent as described in Appendix A. Spacing shall be achieved by the use of low loss dielectric spacers such as styrofoam.

30.1.2 Impedance matching. The length, L_T, of each impedance matching taper shall be 30.0 centimeters as measured from the center of the type-N connector to the long wire transmission line as shown on figure B-2. As may be seen in this figure, the curvature of the taper results in the actual length, ℓ_T, of the wire from which the taper is constructed to be slightly longer than L_T. For this frequency, ℓ_T = 30.8 centimeters as measured from the end containing the connector. Details of the connector installation are shown on figure B-3. Table B-I summarizes the above dimensions and provides additional data for construction the taper itself as described in the following procedures:

TABLE B-I

Data for constructing impedance matching taper

1 GHz chamber

L_a > 150 centimeters

H = 7.5 centimeters

L_T = 30 centimeters

ℓ_T = 30.8 centimeters

x (cm)	h (x) (cm)
0.0	0.05
3.0	0.13
6.0	0.16
9.0	0.21
12.0	0.28
15.0	0.41
18.0	0.63
21.0	1.02
24.0	1.78
27.0	3.42
30.0	7.37

a. Table B-I includes the distances, x, in centimeters, along the taper as measured from the type-N connector as well as the corresponding distances, h(x), in centimeters, of the nearest edge of the wire above the plane of the chamber wall.

b. Construct a full scale pattern similar to figure B-4 by utilizing the data of table B-I. (Note: The horizontal scale of figure B-4 is actually one-half scale for the data in table B-I.) The actual length of wire required for constructing the taper is ℓ_T.

c. Utilizing #10 AWG wire for construction, place the wire over the pattern and bend the wire so that the edge of the wire which will be closest to the chamber wall is along the pattern. (The sharpest bend occurs at the junction of the taper and the long wire antenna at a distance ℓ_T measured along the wire from the end to which the connector shall be attached. It should be noted that at this distance (x = ℓ_T = 30.0 centimeters) h(x) = 7.37 centimeters which corresponds to the bottom edge of #10 AWG conductor whose center is located at H = 7.5 centimeters.

d. When installing the taper in the chamber critical spacing between chamber walls and the wire taper may be achieved by building up appropriate layers of non-conductive electrical tape against which the taper may be rested.

30.2 Chamber designed for 500 MHz. The design procedures for the long wire transmission line and the associated tapers are identical to those in paragraph 30.1. For this reason refer to that paragraph for procedures after noting the following differences. The total length, L_a, of the long wire antenna with tapers attached to both ends shall be at least 300 centimeters.

30.2.1 Long wire transmission line. The distance, H, of the center of the long wire from the chamber walls shall be 15 centimeters.

30.2.2 Impedance matching taper. The length, L_T, of each transmission line taper shall be 60 centimeters and the corresponding ℓ_T is 61.9 centimeters. Table B-II summarizes the above dimensions and provides additional data for constructing the taper itself as described in the procedures of paragraph 30.1.2.

TABLE B-II

Data for constructing impedance matching taper

500 MHz chamber

L_A > 300 centimeters

H = 15 centimeters

L_T = 60 centimeters

ℓ_T = 61.9 centimeters

x (cm)	h (x) (cm)
0.0	0.05
6.0	0.13
12.0	0.17
18.0	0.22
24.0	0.32
30.0	0.49
36.0	0.78
42.0	1.37
48.0	2.65
54.0	5.81
60.0	14.87

30.3 Chamber designed for 200 MHz. The design procedures for the long wire transmission line and the associated tapers are identical to those in paragraph 30.1. For this reason refer to that paragraph for procedures after noting the differences indicated below. The total length, L_A, of the long wire antenna with tapers attached to both ends shall be at least 750 centimeters.

30.3.1 Long wire transmission line. The distance, H, of the center of the long wire from the chamber walls shall be 37.5 centimeters.

30.3.2 Impedance matching taper. The length, L_T, of each transmission line taper shall be 150 centimeters and the corresponding ℓ_T is 155.7 centimeters. Table B-III summarizes the above dimensions and provides additional data for constructing the taper itself as described in the procedures of paragraph 30.1.2.

TABLE B-III

Data for constructing impedance matching taper

200 MHz chamber

L_A > 750 centimeters

H = 37.5 centimeters

L_T = 150 centimeters

ℓ_T = 155.7 centimeters

x (cm)	h (x) (cm)
0.0	0.05
15.0	0.13
30.0	0.17
45.0	0.25
60.0	0.36
75.0	0.58
90.0	1.02
105.0	1.98
120.0	4.41
135.0	11.55
150.0	37.37

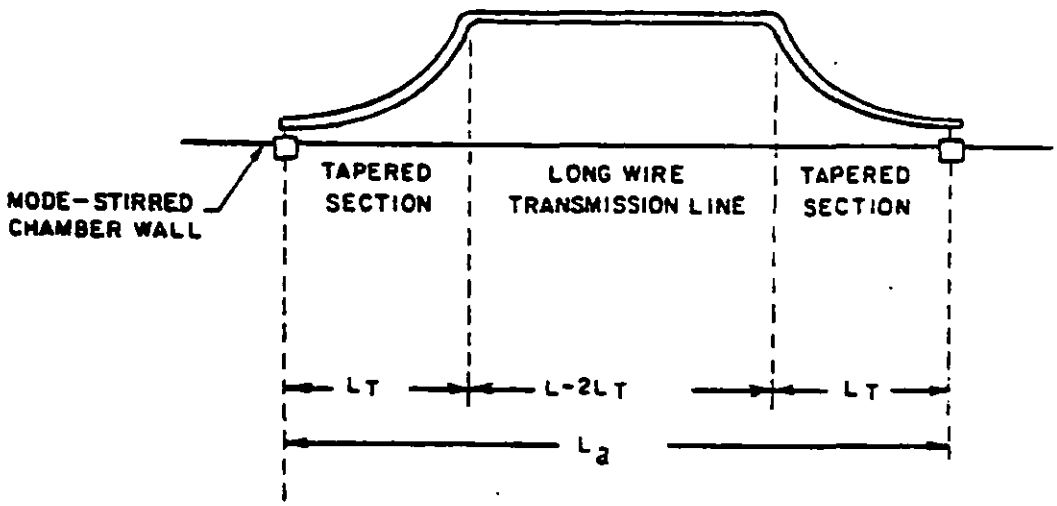

FIGURE B-1. Typical transmission line with taper.

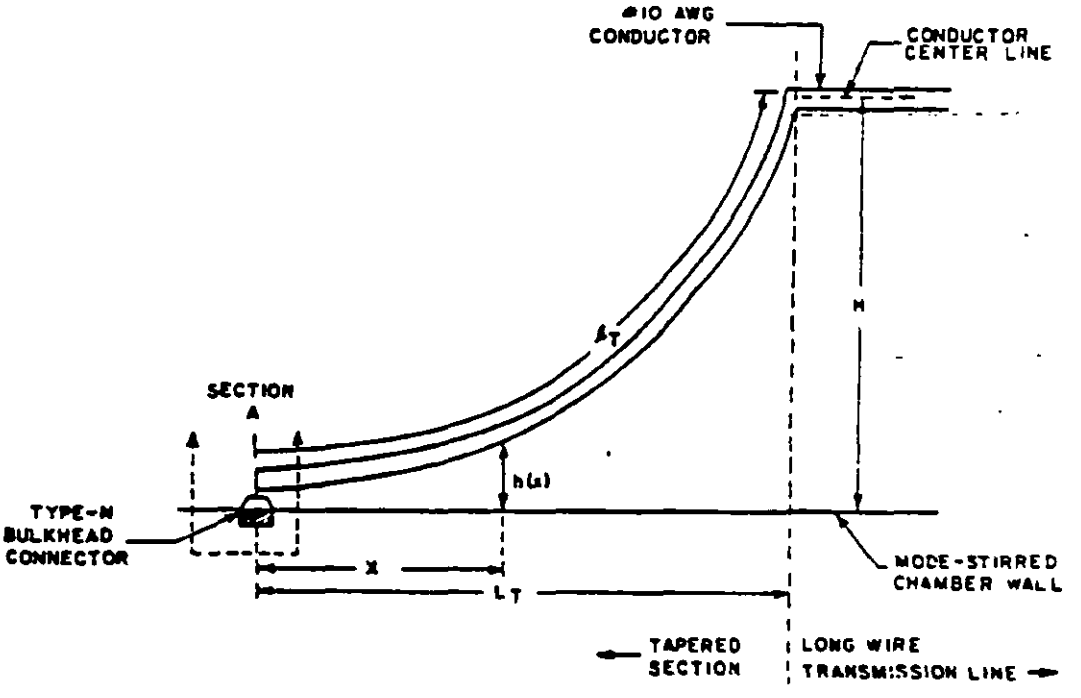

FIGURE B-2. Impedance matching taper.

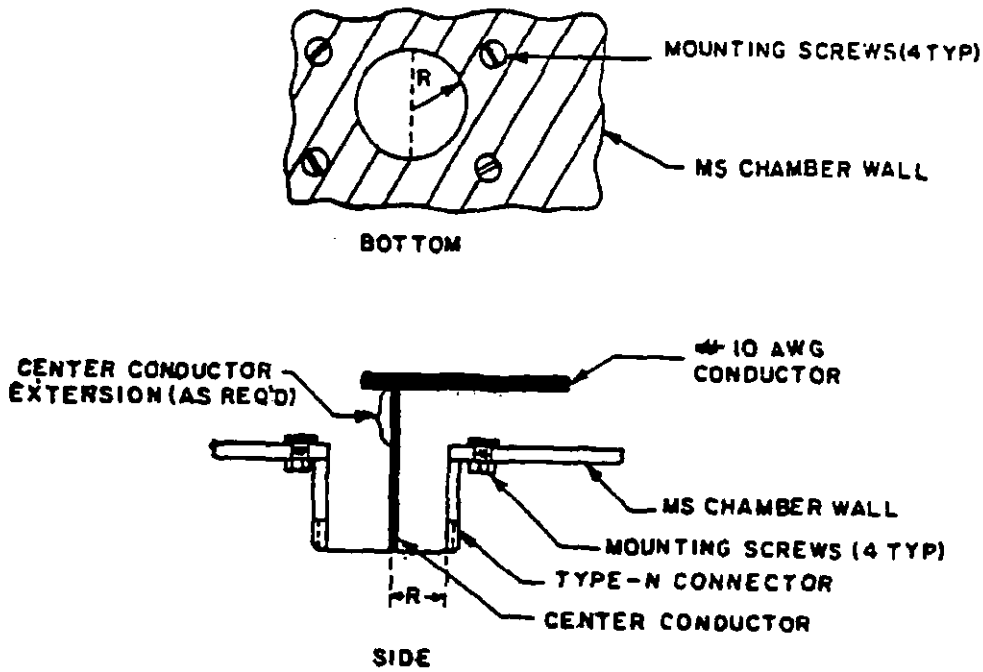

FIGURE B-3. Impedance matching taper: Section A.

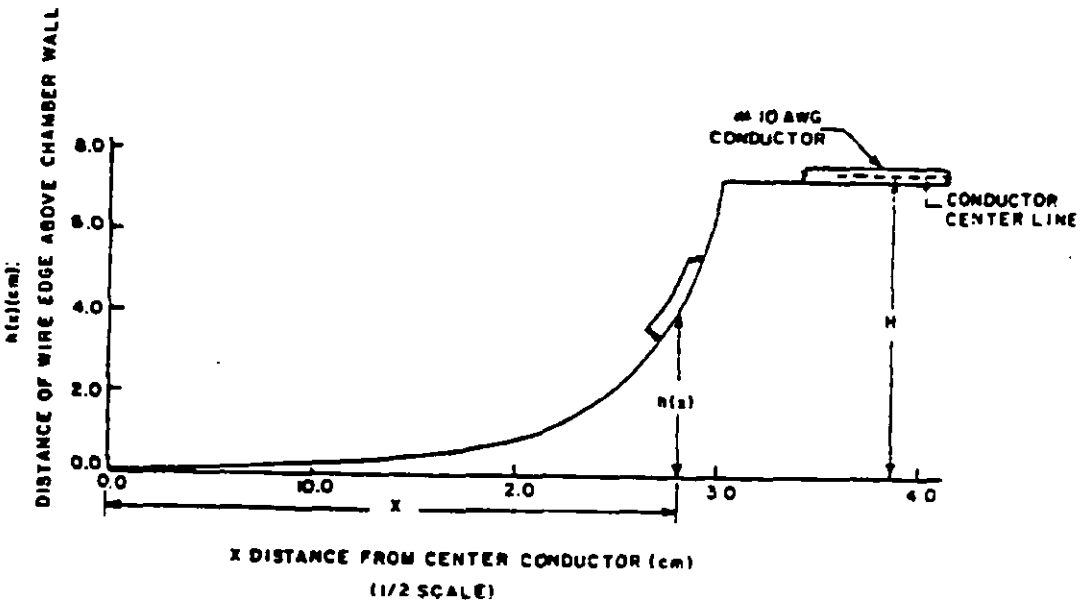

FIGURE B-4. Sample pattern for constructing impedance matching taper.

10 September 1980

APPENDIX C

METHOD 3008